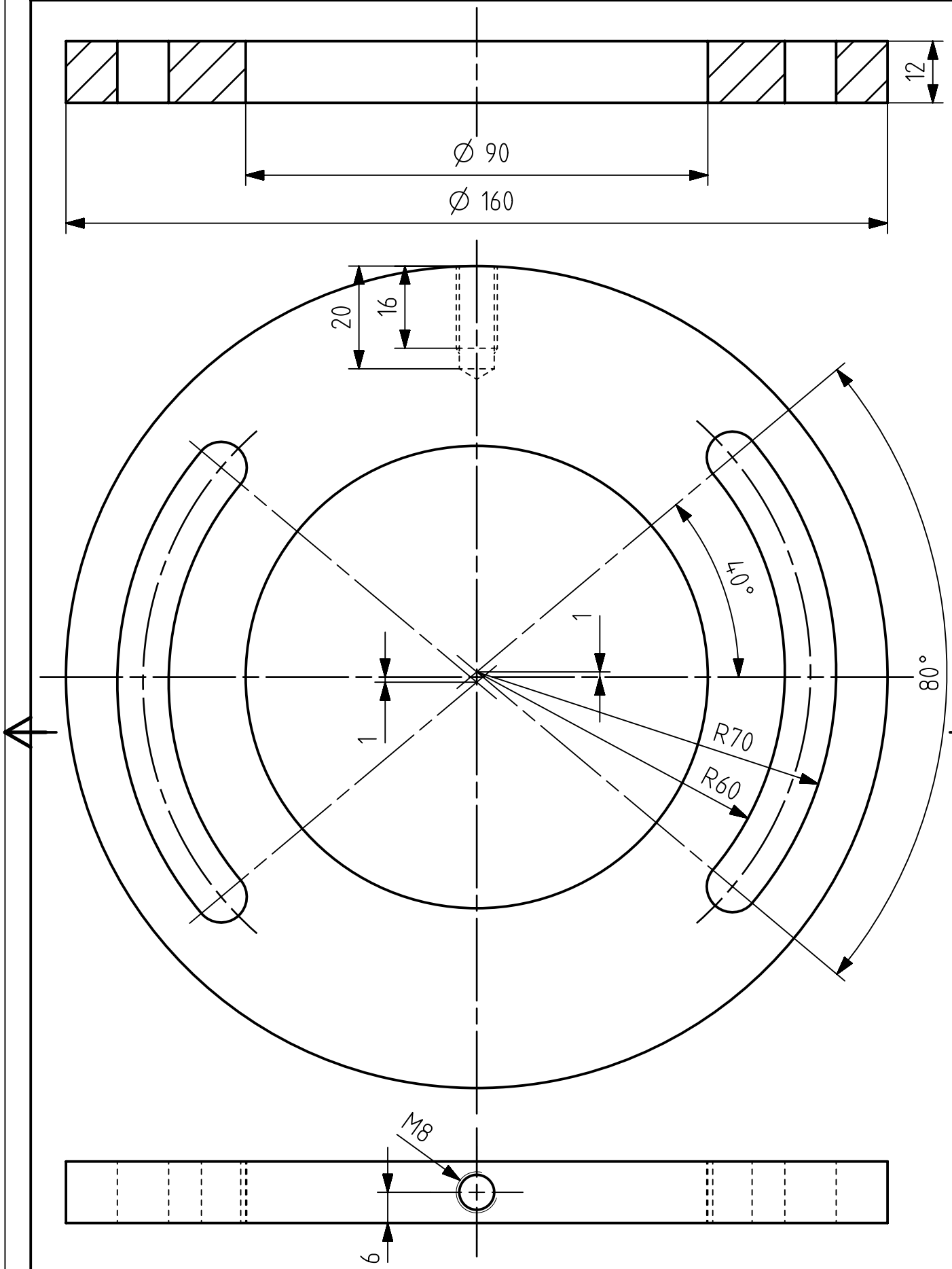

Clamping disc	M-19	scale 1:1
	Topic	
ilearnNX.com	Reference Curves & Dimensions Circles and arcs in the sketch Positioning coordinate systems	