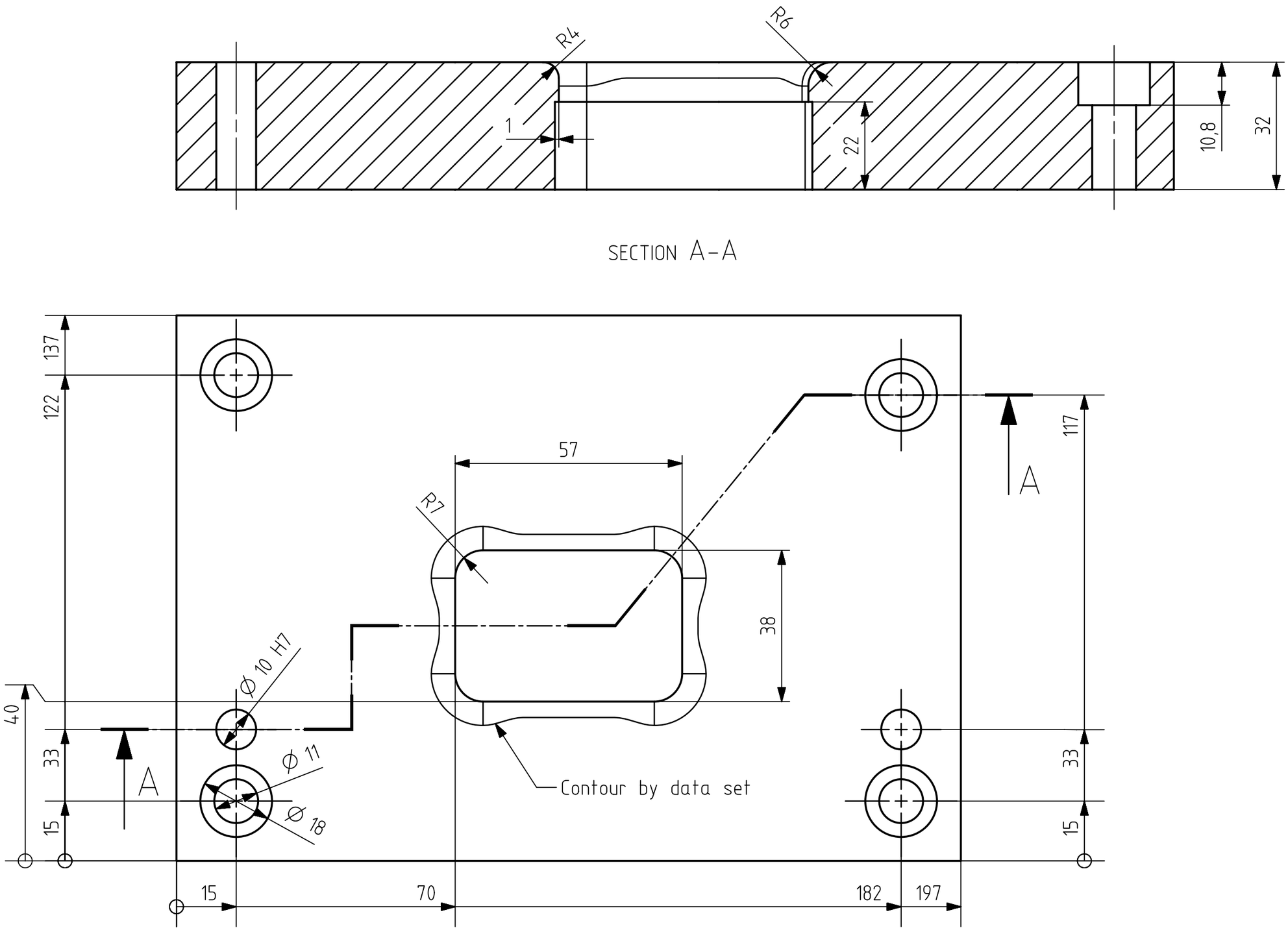

Drawing Die	M23E	scale 1:1
	Topic	
ilearnNX.com	Variable Radius Variable Chamfer Drawing Die	